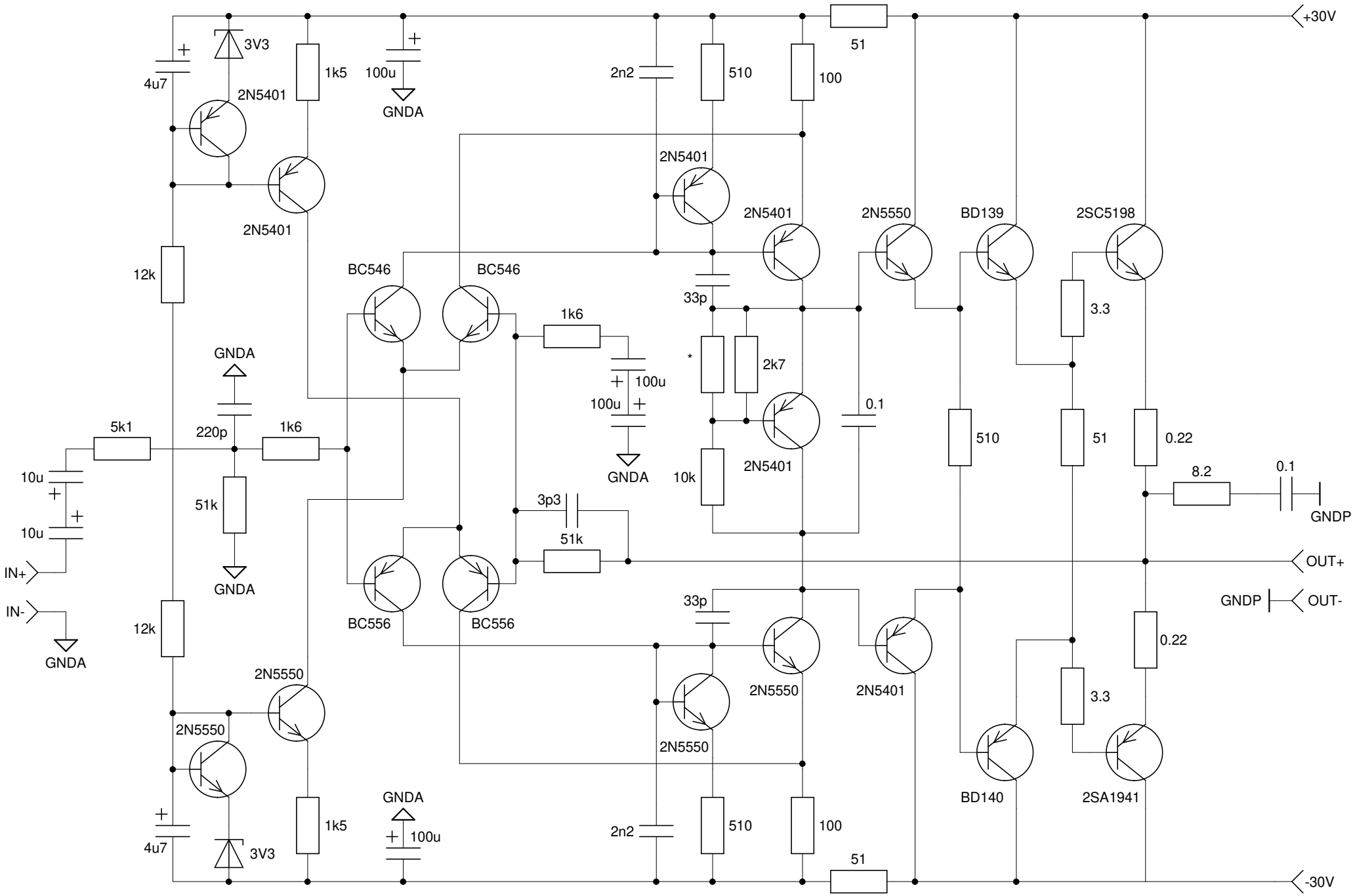

FERN®	Power amplifier Model Sokol 3LT	September 2025